REVISIONS				
LTR	DESCRIPTION	E.C.N.	DATE	BY/APP'D
A	RELEASE TO DOCUMENT CONTROL	09919	07/22/93	MS/DM
B	.783-.793 WAS .778-.798; .014-.017 WAS .013-.017.	10303	02/23/94	MS/

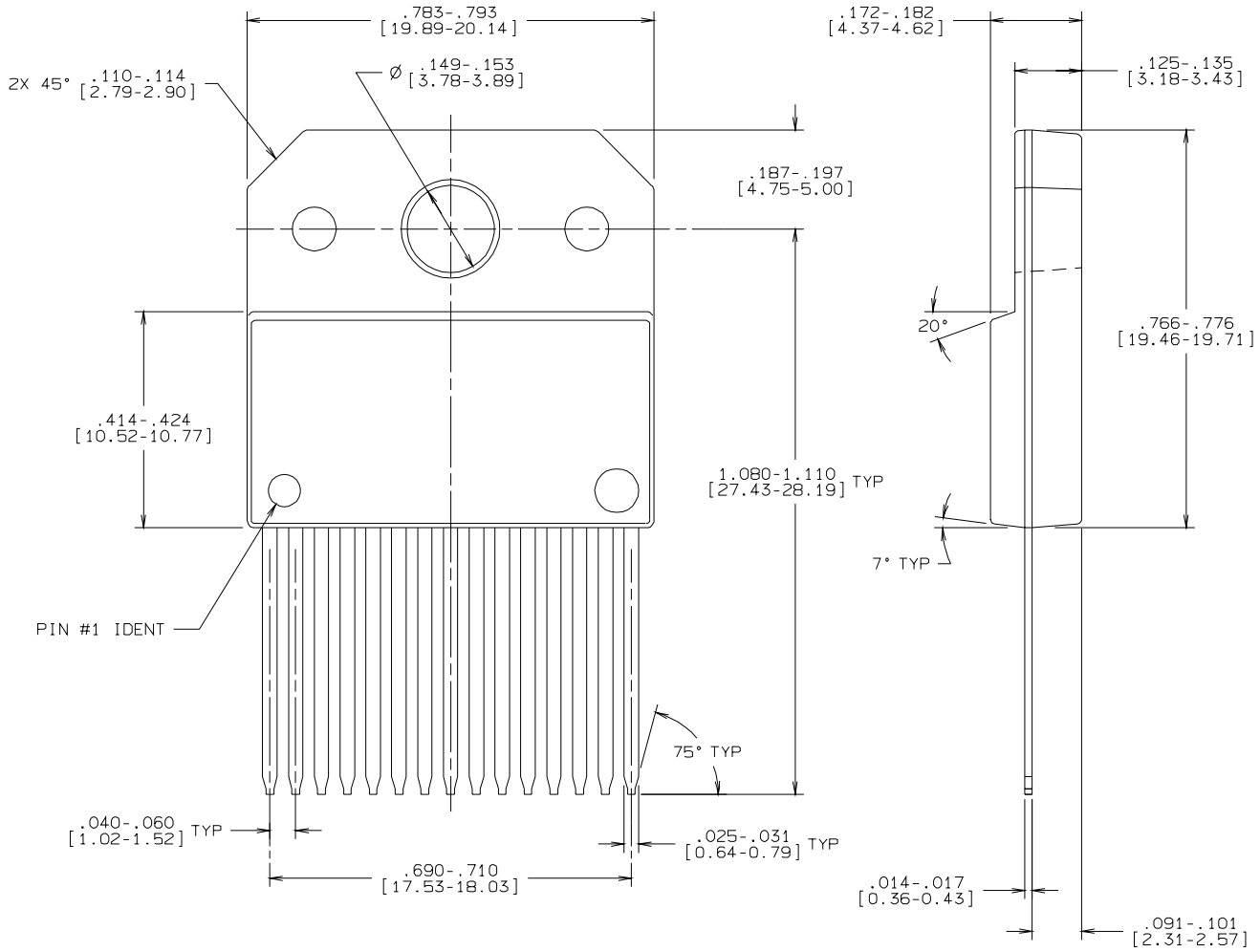

CONTROLLING DIMENSION: INCH

NOTES: UNLESS OTHERWISE SPECIFIED

1. STANDARD LEAD FINISH:
   200 MICROINCHES/ 5.08 MICROMETERS
   MINIMUM LEAD/ TIN (SOLDER) ON COPPER.

2. NO JEDEC REGISTRATION AS OF 07/12/93.

APPROVALS	DATE
DRAWN MARTA SUCHY	07/22/93
DFTG. CHK.	
ENGR. CHK.	
APPROVAL	

NATIONAL SEMICONDUCTOR CORPORATION
2900 Semiconductor Drive, Santa Clara, CA 95052-8090

TO-220, MOLDED,
15 LEAD, STRAIGHT,
ISOLATED

PROJECTION INCH [MM]

SCALE	SIZE	DRAWING NUMBER	REV
N/A	C	MKT-TF15A	B

DO NOT SCALE DRAWING | SHEET 1 OF 1